MOTION.NL

NB SERIES

High precision planetary reducer

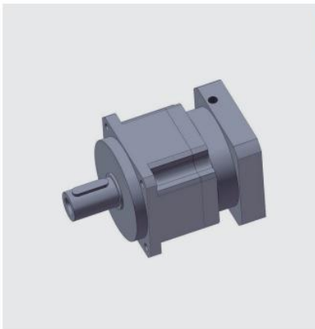

Available size	042～220		NB
Ratio	Single	3～10	01–34
	Double	15～100	
Backlash	Single	≤1，≤3，≤5arcmin	
	Double	≤3，≤5，≤7arcmin	
Maximum Output Torque	13～1900		

Available size	060～180		NBR
Ratio	Single	3～20	35–56
	Double	25～200	
Backlash	Single	≤2，≤4，≤6arcmin	
	Double	≤4，≤7，≤9arcmin	
Maximum Output Torque	30～1140		

Available size	047～200		ND
Ratio	Single	4～10	57–86
	Double	16～100	
Backlash	Single	≤1，≤3，≤5arcmin	
	Double	≤3，≤5，≤7arcmin	
Maximum Output Torque	13～1140		

Available size	064～200		NDR
Ratio	Single	4～20	87–106
	Double	25～200	
Backlash	Single	≤2，≤4，≤6arcmin	
	Double	≤4，≤7，≤9arcmin	
Maximum Output Torque	35～1140		

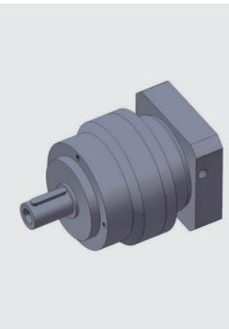

Available size	070～205		NE
Ratio	Single	3～10	107–132
	Double	15～100	
Backlash	Single	≤8arcmin	
	Double	≤12arcmin	
Maximum Output Torque	35～1140		

Available size	070～205		NER
Ratio	Single	3～20	133–152
	Double	25～200	
Backlash	Single	≤10arcmin	
	Double	≤14arcmin	
Maximum Output Torque	30～1140		

Available size	075～180		NF
Ratio	Single	3～10	153–172
	Double	15～100	
Backlash	Single	≤1，≤3，≤5arcmin	
	Double	≤3，≤5，≤7arcmin	
Maximum Output Torque	95～1140		

Available size	075～180		NFR
Ratio	Single	3～20	173–188
	Double	25～200	
Backlash	Double	≤2，≤4，≤6arcmin	
	Single	≤4，≤7，≤9arcmin	
Maximum Output Torque	85～1140		

NB series

We provide customers with high-precision, high rigidity, high torque precision planetary reducer.

NB series assembly (cutting)

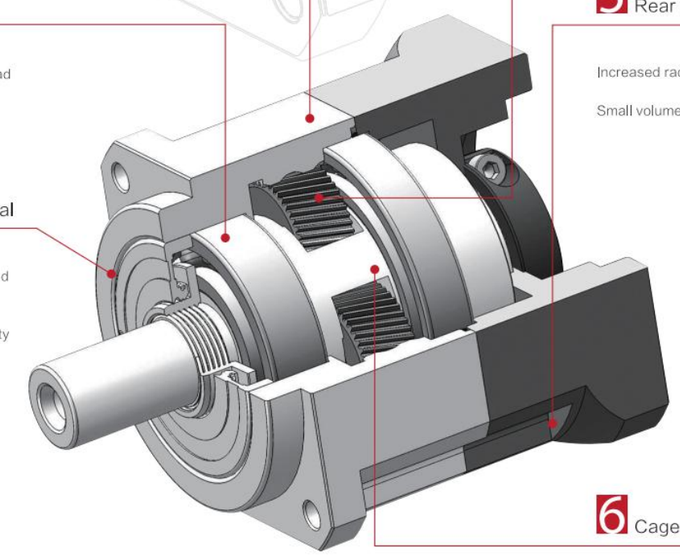

3 Monoblock housing design

Higher precison

Ultimate tensile strenght

Higher torsional stiffness

4 Helical gear

Optimized power transmission

Low noise

Improved precision

2 High precise bearings

Ensuring a higher radial and axial load acceptance

5 Rear cover

Increased radial load capacity

Small volume

1 High performance oil seal

Increased efficiency due to lowered friction

IP65 enclosure enabls continuous duty operation up to 90℃

6 Cage designed shaft

High torsional stiffness

Optimized power transmission

Dimensions（Single， Ratio i= 4～10）

NB042 Series

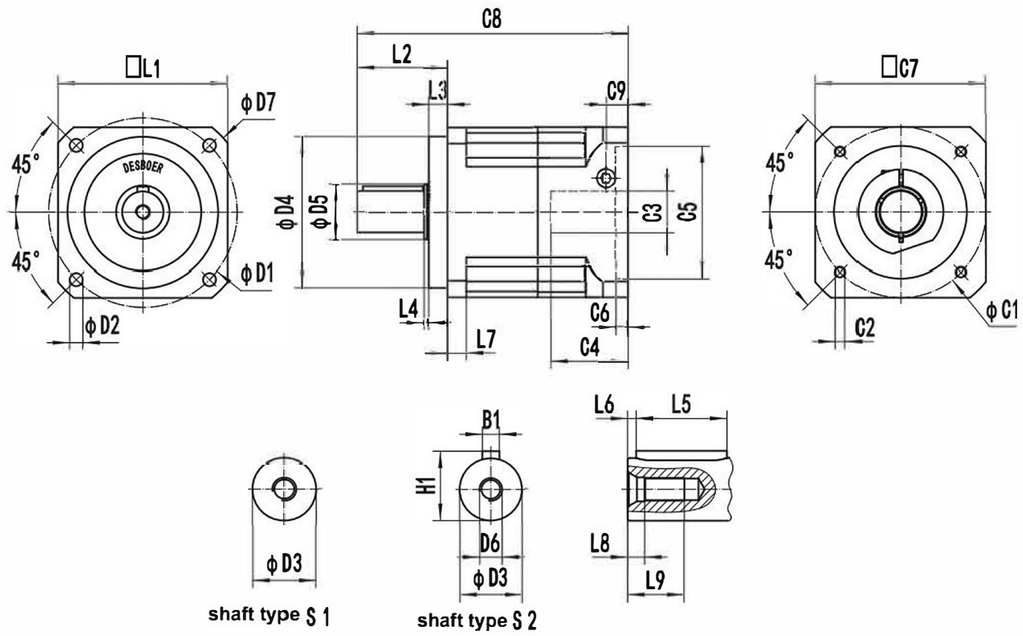

(Unit: mm)

NB042	D1	D2	D3	D4	D5	D6	D7	L1	L2	L3	L4	L5	L6
	50	3.4	13	35	17.5	M4×0.7P	57	42	26	5.5	1	16	2

NB042	L?	L?	L9	C1*	C2*	C3*	C4*	C6*	C6*	C7*	C6*	C9*	B1	H1
	4	3.2	10	46	M4×0.7P	≤14	30.2	30	6	42	100.2	11.2	5	15

*Dimensions based on servo-motor,please contact us for custom made order.

Parameter

MOTION.NL
Extreme and win

Gearbox performance data

Segment number		Single segment						
Ratio	i	4	5	6	7	8	9	10
Rated output torque	Nm	18	20	18	18	16	13	13
Emergency stop torque	Nm	Three times of Maximum Output Torque						
Rated input speed	rpm	5000						
Max input speed	rpm	10000						
Ultraprecise backlash	arcmin	–						
Precise backlash	arcmin	≤3						
Standard backlash	arcmin	≤5						
Torsional rigidity	Nm/arcmin	3						
Max. radial Force	N	780						
Max. axial Force	N	390						
Service Life	hr	20000（10000 under continuous operation）						
Efficiency	%	≥97%						
Weight	kg	0.6						
Operating Temperature	℃	-10℃～+90℃						
Lubrication		Synthetic grease						
Protection Class		IP64						
Mounting Position		All directions						
Noise Level (N1=3000rpm,Non-Loaded)	dB（A）	≤56						
Rotary inertia	Kg・cm²	0.03						

★ Maximum Output Torque T_{2B}=60% × T_{2NOT}
▲ Measured in the shaft center when the output speed is 100rpm

Dimensions（Double， Ratio i =16～100）

NB042A *Series*

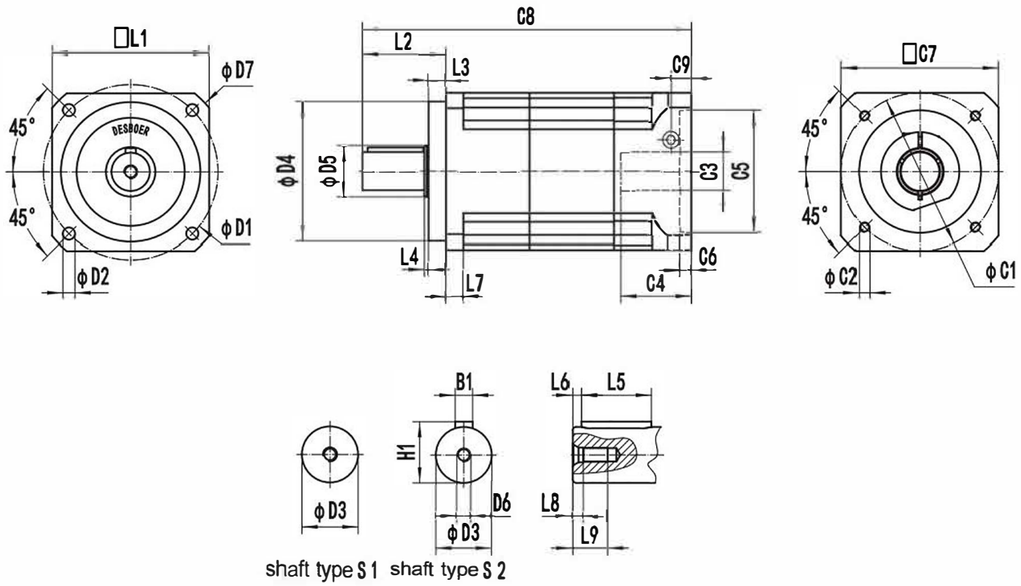

（Unit： mm）

NB042A	D1	D2	D3	D4	D5	D6	D7	L1	L2	L3	L4	L5	L6
	50	3.4	13	35	17.5	M4×0.7P	57	42	26	5.5	1	16	2

NB042A	L?	L?	L9	C1*	C2*	C3*	C4*	C6*	C6*	C7*	C6*	C9*	B1	H1
	4	3.2	10	46	M4×0.7P	≤14	34	30	6	42	131	11.2	5	15

*Dimensions based on servo-motor,please contact us for custom made order.

Parameter

Gearbox performance data

Segment number		Double segment												
Ratio	i	16	20	25	30	35	40	45	50	60	70	80	90	100
Rated output torque	Nm	19	18	20	19	18	16	13	20	19	18	16	13	13
Emergency stop torque	Nm	Three times of Maximum Output Torque												
Rated input speed	rpm	5000												
Max input speed	rpm	10000												
Ultraprecise backlash	arcmin	–												
Precise backlash	arcmin	≤5												
Standard backlash	arcmin	≤7												
Torsional rigidity	Nm/arcmin	3												
Max. radial Force	N	780												
Max. axial Force	N	390												
Service Life	hr	20000(10000 under continuous operation)												
Efficiency	%	≥94%												
Weight	kg	0.8												
Operating Temperature	℃	-10℃～+90℃												
Lubrication		Synthetic grease												
Protection Class		IP64												
Mounting Position		All directions												
Noise Level (N1=3000rpm,Non-Loaded)	dB（A）	≤56												
Rotary inertia	Kg・cm²	0.03												

★ Maximum Output Torque $T_{2B}=60\% \times T_{2NOT}$
▲ Measured in the shaft center when the output speed is 100rpm

Dimensions（Single， Ratio i = 3 ~10）

NB060 *Series*

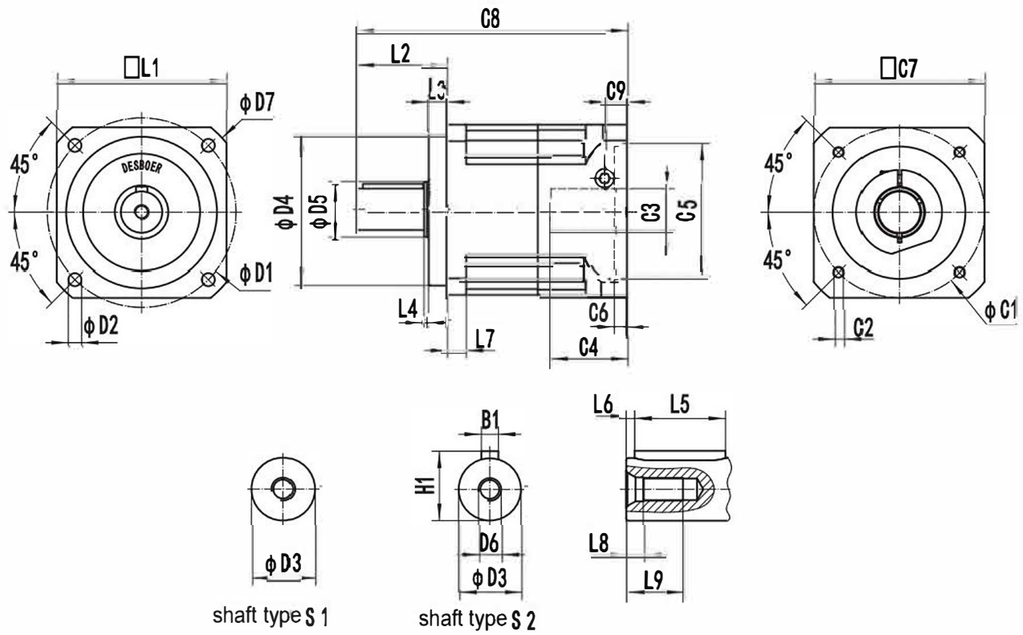

（Unit： mm）

NB060	D2	D2	D3	D3	D3	D6	D7	L1	L3	L3	L4	L3	L6
	70	5.5	16	50	20.5	M5×0.8P	80	60	37	7	2.5	25	2

NB060	L7	L8	L9	C1*	C2*	C3*	C4*	C5*	C6*	C5*	C4*	C5*	B1	H1
	8	4	15	70	M5×0.8P	≤14/≤16	36	50	8	60	122	13.5	5	18

*Dimensions based on servo-motor,please contact us for custom made order.

Parameter

MOTION.NL
Extreme and win

Gearbox performance data

Segment number		Single segment							
Ratio	i	3	4	5	6	7	8	9	10
Rated output torque	Nm	50	45	55	50	45	40	35	35
Emergency stop torque	Nm	Three times of Maximum Output Torque							
Rated input speed	rpm	5000							
Max input speed	rpm	10000							
Ultraprecise backlash	arcmin	–							
Precise backlash	arcmin	≤3							
Standard backlash	arcmin	≤5							
Torsional rigidity	Nm/arcmin	7							
Max. radial Force	N	1530							
Max. axial Force	N	765							
Service Life	hr	20000 (10000 under continuous operation)							
Efficiency	%	≥97%							
Weight	kg	1.3							
Operating Temperature	℃	-10℃ ~ +90℃							
Lubrication		Synthetic grease							
Protection Class		IP64							
Mounting Position		All directions							
Noise Level (N1=3000rpm,Non-Loaded)	dB（A）	≤58							
Rotary inertia	kg · cm²	0.16	0.14	0.13					

★ Maximum Output Torque T_{2B}=60% × T_{2NOT}
▲ Measured in the shaft center when the output speed is 100rpm

Dimensions（Double， Ratio i =15~100）

NB060A *Series*

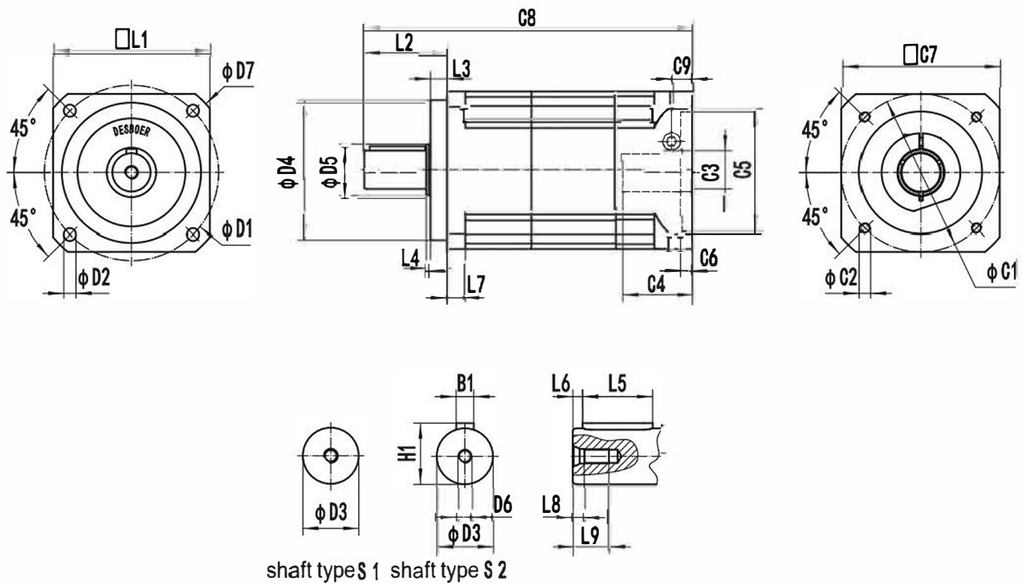

（Unit： mm）

NB060A	D1	D2	D3	D3	D3	D6	D7	L1	L3	L3	L4	L3	L6
	70	5.5	16	50	20.5	M5×0.8P	80	60	37	7	2.5	25	2

NB060A	L7	L3	L3	C1*	C2*	C3*	C4*	C5*	C5*	C5*	C4*	C5*	B1	H1
	8	4	15	70	M5×0.8P	≤14/≤16	36	50	8	60	154	13.5	5	18

*Dimensions based on servo-motor,please contact us for custom made order.

Parameter

Gearbox performance data

Segment number		Double segment												
Ratio	i	15	20	25	30	35	40	45	50	60	70	80	90	100
Rated output torque	Nm	50	45	55	50	45	40	35	55	50	45	40	35	35
Emergency stop torque	Nm	Three times of Maximum Output Torque												
Rated input speed	rpm	5000												
Max input speed	rpm	10000												
Ultra Precise backlash	arcmin	–												
Precise backlash	arcmin	≤5												
Standard backlash	arcmin	≤7												
Torsional rigidity	Nm/arcmin	7												
Max radial Force	N	1530												
Max axial Force	N	765												
Service Life	hr	20000 (10000 under continuous operation)												
Efficiency	%	≥94%												
Weight	kg	1.9												
Operating Temperature	℃	-10℃~+90℃												
Lubrication		Synthetic grease												
Protection Class		IP64												
Mounting Position		All directions												
Noise Level (N1=3000rpm,Non-Loaded)	dB（A）	≤60												
Rotary inertia	kg · cm²	0.13												

★ Maximum Output Torque $T_{2B}=60\% \times T_{2NOT}$
▲ Measured in the shaft center when the output speed is 100rpm

Dimensions（Double， Ratio i =15~ 100）

NB060 *Series*

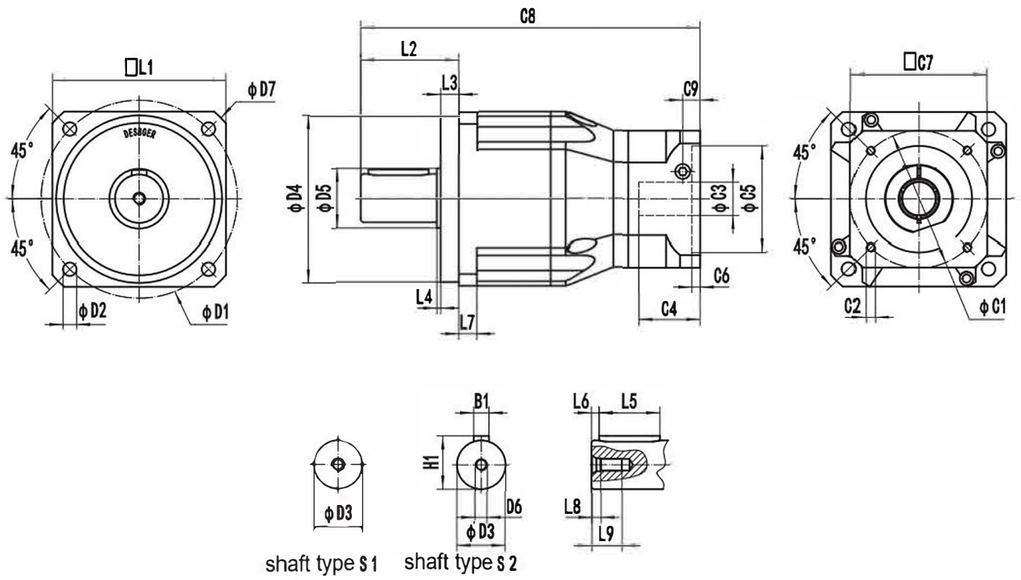

（Unit： mm）

NB060	D1	D2	D3	D4	D5	D6	D7	L1	L2	L3	L4	L5	L6
	70	5.5	16	50	20.5	M5×0.8P	80	60	37	7	2.5	25	2

NB060	L?	L?	L9	C1*	C2*	C3*	C4*	C5*	C5*	C5*	C5*	C9*	B1	H1
	8	4	15	46	M4×0.7P	≤14	33.7	30	6	42	147	12.7	5	18

*Dimensions based on servo-motor,please contact us for custom made order.

Parameter

Gearbox performance data

Segment number		Double segment												
Ratio	i	15	20	25	30	35	40	45	50	60	70	80	90	100
Rated output torque	Nm	50	45	55	50	45	40	35	55	50	45	40	35	35
Emergency stop torque	Nm	Three times of Maximum Output Torque												
Rated input speed	rpm	5000												
Max input speed	rpm	10000												
Ultraprecise backlash	arcmin	–												
Precise backlash	arcmin	≤5												
Standard backlash	arcmin	≤7												
Torsional rigidity	Nm/arcmin	7												
Max. radial Force	N	1530												
Max. axial Force	N	765												
Service Life	hr	20000 (10000 under continuous operation)												
Efficiency	%	≥94%												
Weight	kg	1.5												
Operating Temperature	℃	-10℃~+90℃												
Lubrication		Synthetic grease												
Protection Class		IP64												
Mounting Position		All directions												
Noise Level (N1=3000rpm,Non-Loaded)	dB（A）	≤58												
Rotary inertia	Kg・cm²	0.03												

★ Maximum Output Torque $T_{2B}=60\% \times T_{2NOT}$

▲ Measured in the shaft center when the output speed is 100rpm

Dimensions（Single， Ratio i =3~10）

NB090 *Series*

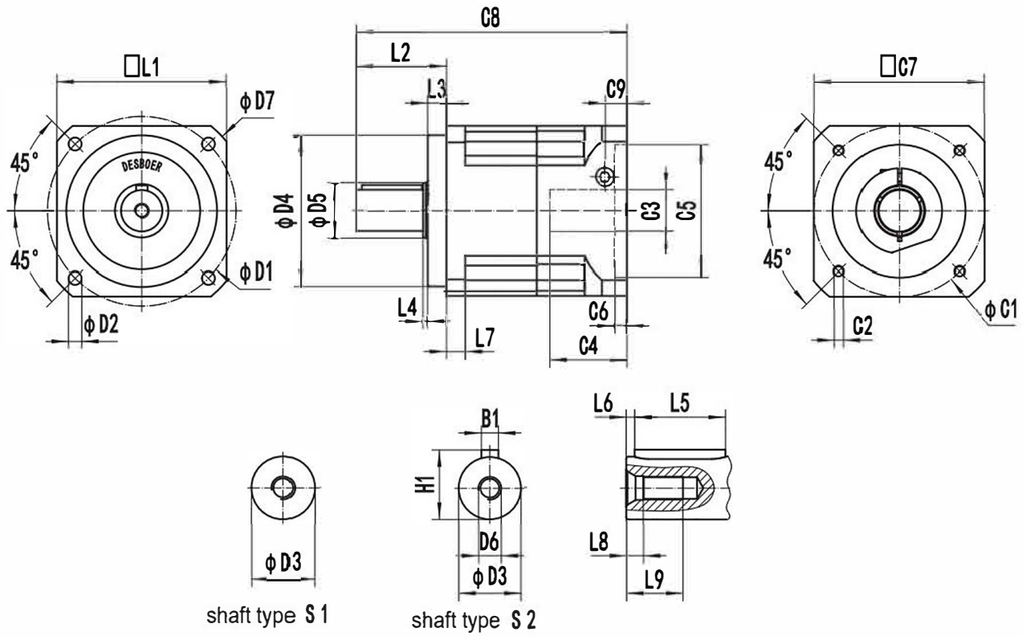

（Unit： mm）

NB090	D2	D2	D3	D3	D3	D6	D7	L1	L3	L3	L4	L3	L6
	100	7	22	80	29.5	M8×1.25P	115.5	90	48	10	2.5	32	3

NB090	L7	L3	L3	C1*	C2*	C3*	C4*	C5*	C5*	C5*	C4*	C5*	B1	H1
	10	6	20	90	M5×0.8P	≤19/≤24	44	70	8	90	146.5	14.5	6	24.5

*Dimensions based on servo-motor,please contact us for custom made order.

Parameter

Gearbox performance data

Segment number		Single segment							
Ratio	i	3	4	5	6	7	8	9	10
Rated output torque	Nm	120	130	150	140	133	110	95	95
Emergency stop torque	Nm	Three times of Maximum Output Torque							
Rated input speed	rpm	4000							
Max input speed	rpm	8000							
Ultraprecise backlash	arcmin	≤1							
Precise backlash	arcmin	≤3							
Standard backlash	arcmin	≤5							
Torsional rigidity	Nm/arcmin	14							
Max. radial Force	N	3250							
Max. axial Force	N	1625							
Service Life	hr	20000 (10000 under continuous operation)							
Efficiency	%	≥97%							
Weight	kg	3.7							
Operating Temperature	℃	-10℃~+90℃							
Lubrication		Synthetic grease							
Protection Class		IP64							
Mounting Position		All directions							
Noise Level (N1=3000rpm,Non-Loaded)	dB（A）	≤60							
Rotary inertia	kg · cm²	0.61	0.48	0.47	0.45		0.44		

★ Maximum Output Torque $T_{2B}=60\% \times T_{2NOT}$

▲ Measured in the shaft center when the output speed is 100rpm

Dimensions（Double， Ratio i =15~100）

NB090A *Series*

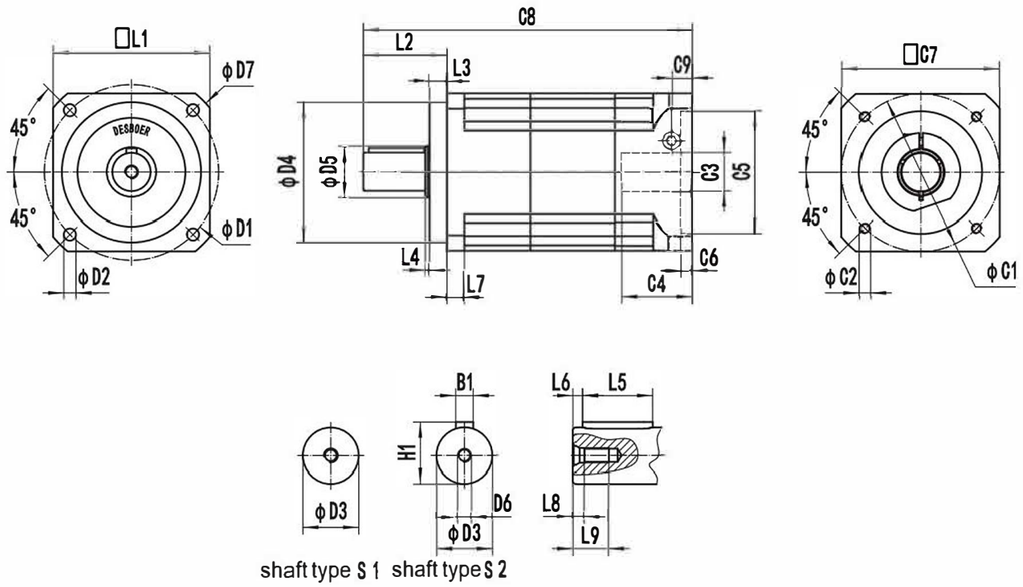

（Unit： mm）

NB090A	D2	D2	D3	D3	D3	D6	D7	L1	L3	L3	L4	L3	L6
	100	7	22	80	29.5	M8×1.25P	115.5	90	48	10	2.5	32	3

NB090A	L7	L3	L3	C1*	C2*	C3*	C4*	C5*	C5*	C5*	C4*	C5*	B1	H1
	10	6	20	90	M5×0.8P	≤19/≤24	44	70	8	90	191.5	14.5	6	24.5

*Dimensions based on servo-motor,please contact us for custom made order.

Parameter

MOTION.NL
Extreme and win

Gearbox performance data

Segment number		Double segment												
Ratio	i	15	20	25	30	35	40	45	50	60	70	80	90	100
Rated output torque	Nm	120	130	150	140	130	110	95	150	140	130	110	95	95
Emergency stop torque	Nm	Three times of Maximum Output Torque												
Rated input speed	rpm	4000												
Max input speed	rpm	8000												
Ultraprecise backlash	arcmin	–												
Precise backlash	arcmin	≤5												
Standard backlash	arcmin	≤7												
Torsional rigidity	Nm/arcmin	14												
Max. radial Force	N	3250												
Max. axial Force	N	1625												
Service Life	hr	20000 (10000 under continuous operation)												
Efficiency	%	≥94%												
Weight	kg	5.3												
Operating Temperature	℃	−10℃ ~ +90℃												
Lubrication		Synthetic grease												
Protection Class		IP64												
Mounting Position		All directions												
Noise Level (N1=3000rpm,Non-Loaded)	dB（A）	≤63												
Rotary inertia	kg · cm²	0.47							0.44					

★ Maximum Output Torque $T_{2B}=60\% \times T_{2NOT}$

▲ Measured in the shaft center when the output speed is 100rpm

Dimensions（Double， Ratio i =15~100）

NB090 *Series*

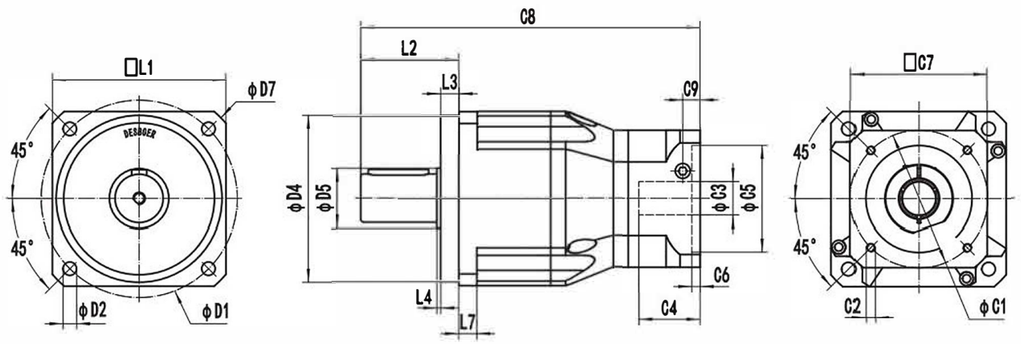

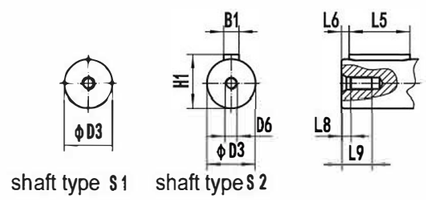

（Unit： mm）

NB090	D1	D2	D3	D4	D5	D6	D7	L1	L2	L3	L4	L5	L6
	100	7	22	80	29.5	M8×1.25P	115.5	90	48	10	2.5	32	3

NB090	L?	L?	L9	C1*	C2*	C3*	C4*	C5*	C5*	C5*	C5*	C9*	B1	H1
	10	6	20	70	M5×0.8P	≤14/≤16	36	50	8	60	182.5	13.5	6	24.5

*Dimensions based on servo-motor,please contact us for custom made order.

Parameter

MOTION.NL
Extreme and win

Gearbox performance data

Segment number		Double segment												
Ratio	i	15	20	25	30	35	40	45	50	60	70	80	90	100
Rated output torque	Nm	120	130	150	140	130	110	95	150	140	130	110	95	95
Emergency stop torque	Nm	Three times of Maximum Output Torque												
Rated input speed	rpm	4000												
Max input speed	rpm	8000												
Ultraprecise backlash	arcmin	–												
Precise backlash	arcmin	≤5												
Standard backlash	arcmin	≤7												
Torsional rigidity	Nm/arcmin	14												
Max. radial Force	N	3250												
Max. axial Force	N	1625												
Service Life	hr	20000(10000 under continuous operation)												
Efficiency	%	≥94%												
Weight	kg	4.1												
Operating Temperature	℃	-10℃~+90℃												
Lubrication		Synthetic grease												
Protection Class		IP64												
Mounting Position		All directions												
Noise Level (N1=3000rpm,Non-Loaded)	dB（A）	≤60												
Rotary inertia	Kg・cm²	0.13												

★ Maximum Output Torque $T_{2B}=60\% \times T_{2NOT}$

▲ Measured in the shaft center when the output speed is 100rpm

Dimensions（Single， Ratio i =3~10）

NB115 *Series*

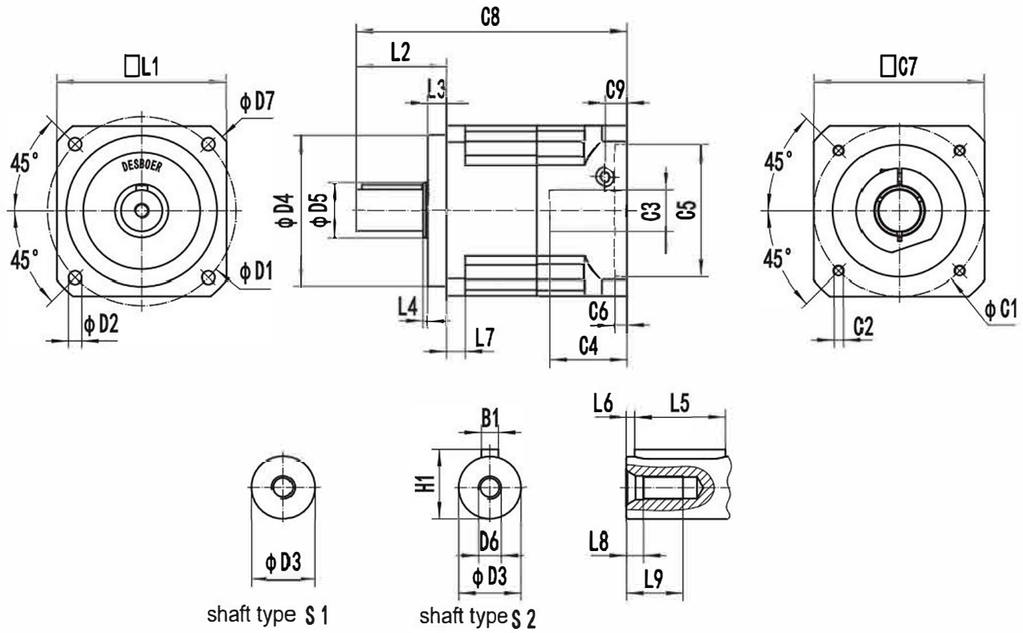

（Unit：mm）

NB115	D1	D2	D3	D3	D3	D6	D7	L1	L3	L3	L4	L3	L6
	130	9	32	110	39.5	M12×1.75P	152	115	65	12	2.5	40	5

NB115	L7	L3	L3	C1*	C2*	C3*	C4*	C5*	C5*	C5*	C4*	C5*	B1	H1
	12	9.5	28	130	M8×1.25P	≤24/≤35	60	95	10	115	195	21	10	35

*Dimensions based on servo-motor,please contact us for custom made order.

Parameter

MOTION.NL
Extreme and win

Gearbox performance data

Segment number		Single segment							
Ratio	i	3	4	5	6	7	8	9	10
Rated output torque	Nm	190	270	310	290	280	240	210	210
Emergency stop torque	Nm	Three times of Maximum Output Torque							
Rated input speed	rpm	4000							
Max input speed	rpm	8000							
Ultraprecise backlash	arcmin	≤1							
Precise backlash	arcmin	≤3							
Standard backlash	arcmin	≤5							
Torsional rigidity	Nm/arcmin	25							
Max. radial Force	N	6700							
Max. axial Force	N	3350							
Service Life	hr	20000 (10000 under continuous operation)							
Efficiency	%	≥97%							
Weight	kg	7.8							
Operating Temperature	℃	−10℃~+90℃							
Lubrication		Synthetic grease							
Protection Class		IP64							
Mounting Position		All directions							
Noise Level (N1=3000rpm,Non-Loaded)	dB（A）	≤63							
Rotary inertia	kg · cm²	3.25	2.74	2.71	2.65	2.62	2.58	2.57	

★ Maximum Output Torque $T_{2B}=60\% \times T_{2NOT}$

▲ Measured in the shaft center when the output speed is 100rpm

Dimensions（Double， Ratio i =15~100）

NB115 *Series*

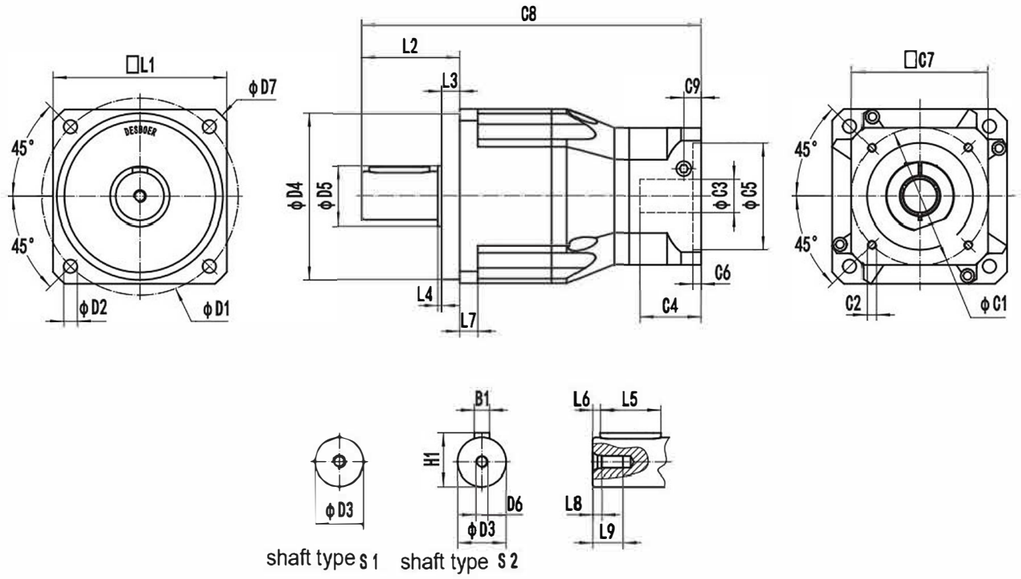

（Unit： mm）

NB115	D1	D2	D3	D3	D3	D6	D7	L1	L3	L3	L4	L3	L6
	130	9	32	110	39.5	M12×1.75P	152	115	65	12	2.5	40	5

NB115	L3	L3	L3	C1*	C2*	C3*	C4*	C5*	C5*	C5*	C4*	C5*	B1	H1
	12	9.5	28	90	M5×0.8P	≤19/≤24	44	70	8	90	228.5	14.5	10	35

*Dimensions based on servo-motor,please contact us for custom made order.

Parameter

MOTION.NL
Extreme and win

Gearbox performance data

Segment number		Double segment												
Ratio	i	15	20	25	30	35	40	45	50	60	70	80	90	100
Rated output torque	Nm	190	270	310	290	280	240	210	310	290	280	240	210	210
Emergency stop torque	Nm	Three times of Maximum Output Torque												
Rated input speed	rpm	4000												
Max input speed	rpm	8000												
Ultraprecise backlash	arcmin	≤3												
Precise backlash	arcmin	≤5												
Standard backlash	arcmin	≤7												
Torsional rigidity	Nm/arcmin	25												
Max. radial Force	N	6700												
Max. axial Force	N	3350												
Service Life	hr	20000(10000 under continuous operation)												
Efficiency	%	≥94%												
Weight	kg	9.0												
Operating Temperature	℃	-10℃~+90℃												
Lubrication		Synthetic grease												
Protection Class		IP64												
Mounting Position		All directions												
Noise Level (N1=3000rpm,Non-Loaded)	dB（A）	≤63												
Rotary inertia	kg · cm²	0.47										0.44		

★ Maximum Output Torque $T_{2B}=60\% \times T_{2NOT}$
▲ Measured in the shaft center when the output speed is 100rpm

Dimensions（Single， Ratio i =3～10）

NB142 *Series*

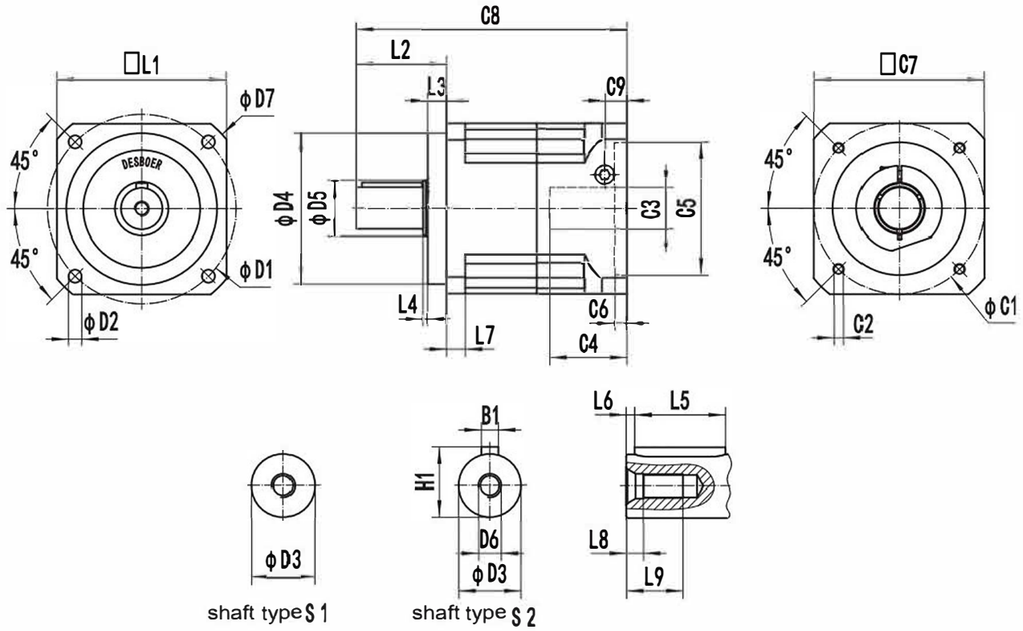

（Unit：mm）

NB142	D1	D2	D3	D3	D3	D6	D7	L1	L3	L3	L4	L3	L6
	165	11	40	130	51.5	M16×2P	185	142	97	15	3.5	70	4

NB142	L7	L3	L3	C1*	C2*	C3*	C3*	C5*	C5*	C5*	C3*	C3*	B1	H1
	20	12	36	145	M8×1.25P	≤42	74	110	10	142	256	28.5	12	43

*Dimensions based on servo-motor,please contact us for custom made order.

Parameter

MOTION.NL
Extreme and win

Gearbox performance data

Segment number		Single segment							
Ratio	i	3	4	5	6	7	8	9	10
Rated output torque	Nm	320	510	610	570	520	470	420	420
Emergency stop torque	Nm	Three times of Maximum Output Torque							
Rated input speed	rpm	3000							
Max input speed	rpm	6000							
Ultraprecise backlash	arcmin	≤1							
Precise backlash	arcmin	≤3							
Standard backlash	arcmin	≤5							
Torsional rigidity	Nm/arcmin	50							
Max. radial Force	N	9400							
Max. axial Force	N	4700							
Service Life	hr	20000 (10000 under continuous operation)							
Efficiency	%	≥97%							
Weight	kg	14.5							
Operating Temperature	℃	-10℃～+90℃							
Lubrication		Synthetic grease							
Protection Class		IP64							
Mounting Position		All directions							
Noise Level (N1=3000rpm,Non-Loaded)	dB（A）	≤65							
Rotary inertia	kg · cm²	9.21	7.54	7.42	7.25	7.14	7.07	7.04	7.03

★ Maximum Output Torque $T_{2B}=60\% \times T_{2NOT}$
▲ Measured in the shaft center when the output speed is 100rpm

Dimensions（Double， Ratio i =15~100）

NB142 *Series*

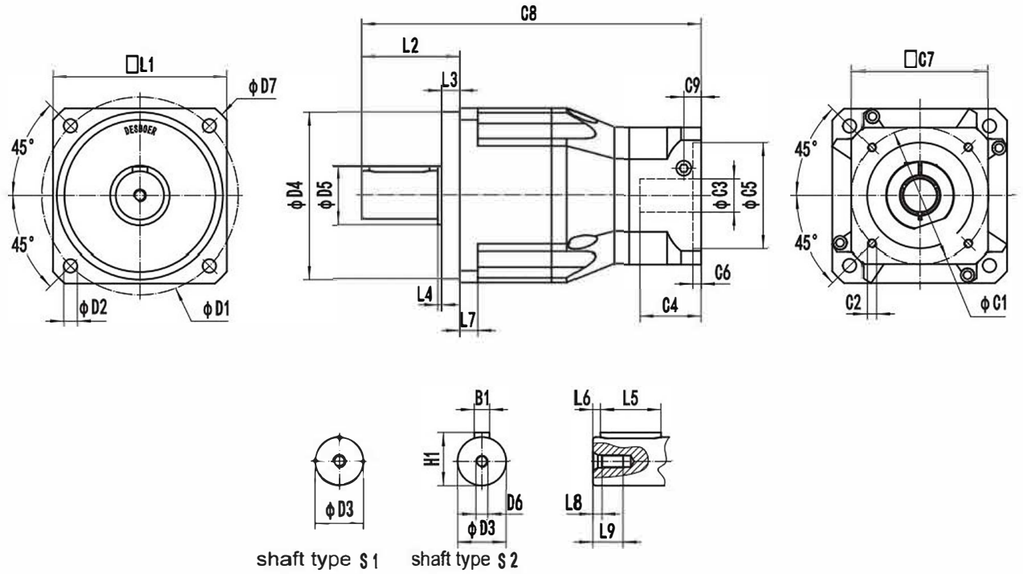

(Unit： mm)

NB142	D1	D2	D3	D3	D3	D6	D7	L1	L3	L3	L4	L3	L6
	165	11	40	130	51.5	M16×2P	185	142	97	15	3.5	70	4

NB142	L7	L3	L3	C1*	C2*	C3*	C4*	C5*	C5*	C5*	C4*	C5*	B1	H1
	20	12	36	145	M8×1.25P	≤24/≤35	65	110	10	130	311	26	12	43

*Dimensions based on servo-motor,please contact us for custom made order.

Parameter

MOTION.NL
Extreme and win

— *Gearbox performance data*

Segment number		Double segment												
Ratio	i	15	20	25	30	35	40	45	50	60	70	80	90	100
Rated output torque	Nm	320	510	610	570	520	470	420	610	570	520	470	420	420
Emergency stop torque	Nm	Three times of Maximum Output Torque												
Rated input speed	rpm	3000												
Max input speed	rpm	6000												
Ultraprecise backlash	arcmin	≤3												
Precise backlash	arcmin	≤5												
Standard backlash	arcmin	≤7												
Torsional rigidity	Nm/arcmin	50												
Max. radial Force	N	9400												
Max. axial Force	N	4700												
Service Life	hr	20000(10000 under continuous operation)												
Efficiency	%	≥94%												
Weight	kg	17.5												
Operating Temperature	℃	−10℃ ~ +90℃												
Lubrication		Synthetic grease												
Protection Class		IP64												
Mounting Position		All directions												
Noise Level (N1=3000rpm,Non-Loaded)	dB（A）	≤65												
Rotary inertia	kg · cm²	2.71										2.57		

★ Maximum Output Torque $T_{2B}=60\% \times T_{2NOT}$
▲ Measured in the shaft center when the output speed is 100rpm

Dimensions（Single， Ratio i =3～10）

NB180 Series

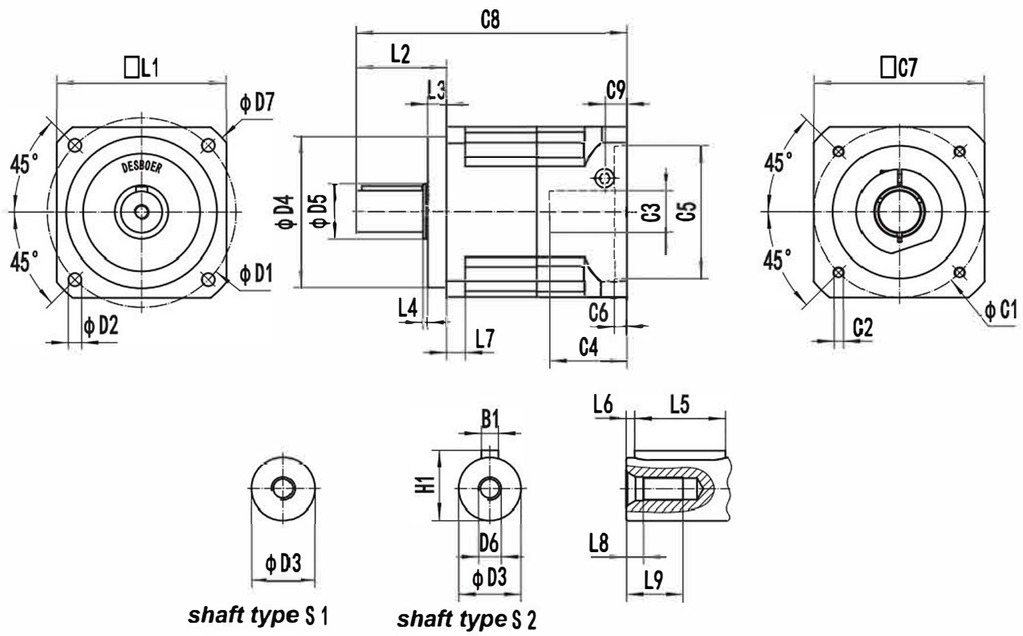

（Unit: mm）

NB180	D3	D3	D3	D3	D3	D6	D7	L1	L2	D3	L4	D3	L6
	215	13	55	160	69.5	M20×2.5P	240	180	105	20	3.5	70	6

NB180	L9	L8	L9	C1*	C2*	C3*	C4*	C5*	C5*	C5*	C4*	C5*	B1	H1
	20	15	42	200	M12×1.75P	≤55	116	114.3	10	180	319	52	16	59

*Dimensions based on servo-motor,please contact us for custom made order.

Parameter

MOTION.NL
Extreme and win

Gearbox performance data

Segment number		Single segment							
Ratio	i	3	4	5	6	7	8	9	10
Rated output torque	Nm	550	990	1140	1040	1040	950	850	850
Emergency stop torque	Nm	Three times of Maximum Output Torque							
Rated input speed	rpm	3000							
Max input speed	rpm	6000							
Ultraprecise backlash	arcmin	≤1							
Precise backlash	arcmin	≤3							
Standard backlash	arcmin	≤5							
Torsional rigidity	Nm/arcmin	145							
Max. radial Force	N	14500							
Max. axial Force	N	7250							
Service Life	hr	20000 (10000 under continuous operation)							
Efficiency	%	≥97%							
Weight	kg	29							
Operating Temperature	℃	−10℃～+90℃							
Lubrication		Synthetic grease							
Protection Class		IP64							
Mounting Position		All directions							
Noise Level (N1=3000rpm,Non-Loaded)	dB（A）	≤67							
Rotary inertia	kg · cm²	28.98	23.67	23.29	22.75	22.48	22.59	22.53	22.51

★ Maximum Output Torque $T_{2B}=60\% \times T_{2NOT}$
▲ Measured in the shaft center when the output speed is 100rpm

Dimensions（Double， Ratio i =15~100）

NB180 *Series*

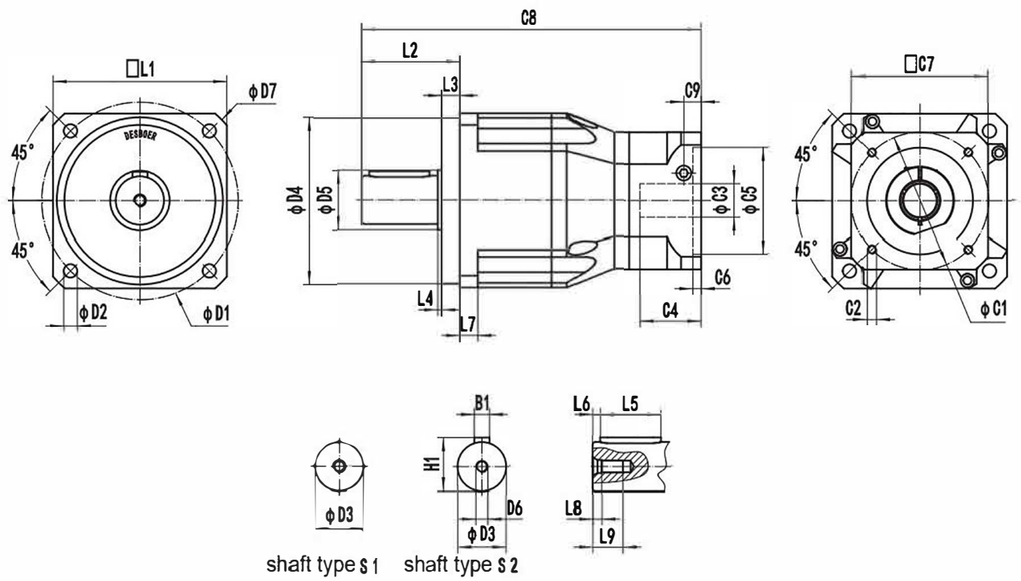

（Unit： mm）

NB180	D3	D3	D3	D3	D3	D6	D7	L1	L2	D3	L4	D3	L6
	215	13	55	160	69.5	M20×2.5P	240	180	105	20	3.5	70	6

NB180	L9	L8	L9	C1*	C2*	C3*	C4*	C5*	C5*	C5*	C4*	C5*	B1	H1
	20	15	42	145	M8×1.25P	≤42	67	110	10	142	348	21.5	16	59

*Dimensions based on servo-motor,please contact us for custom made order.

Parameter

MOTION.NL
Extreme and win

Gearbox performance data

Segment number		Double segment												
Ratio	i	15	20	25	30	35	40	45	50	60	70	80	90	100
Rated output torque	Nm	550	990	1140	1040	1040	950	850	1140	1040	1040	950	850	850
Emergency stop torque	Nm	Three times of Maximum Output Torque												
Rated input speed	rpm	3000												
Max input speed	rpm	6000												
Ultraprecise backlash	arcmin	≤3												
Precise backlash	arcmin	≤5												
Standard backlash	arcmin	≤7												
Torsional rigidity	Nm/arcmin	145												
Max. radial Force	N	14500												
Max. axial Force	N	7250												
Service Life	hr	20000(10000 under continuous operation)												
Efficiency	%	≥94%												
Weight	kg	33												
Operating Temperature	℃	-10℃ ~ +90℃												
Lubrication		Synthetic grease												
Protection Class		IP64												
Mounting Position		All directions												
Noise Level (N1=3000rpm,Non-Loaded)	dB（A）	≤67												
Rotary inertia	kg · cm²	7.42									7.03			

★ Maximum Output Torque $T_{2B}=60\% \times T_{2NOT}$

▲ Measured in the shaft center when the output speed is 100rpm

Dimensions（Single， Ratio i =3~10）

NB220 *Series*

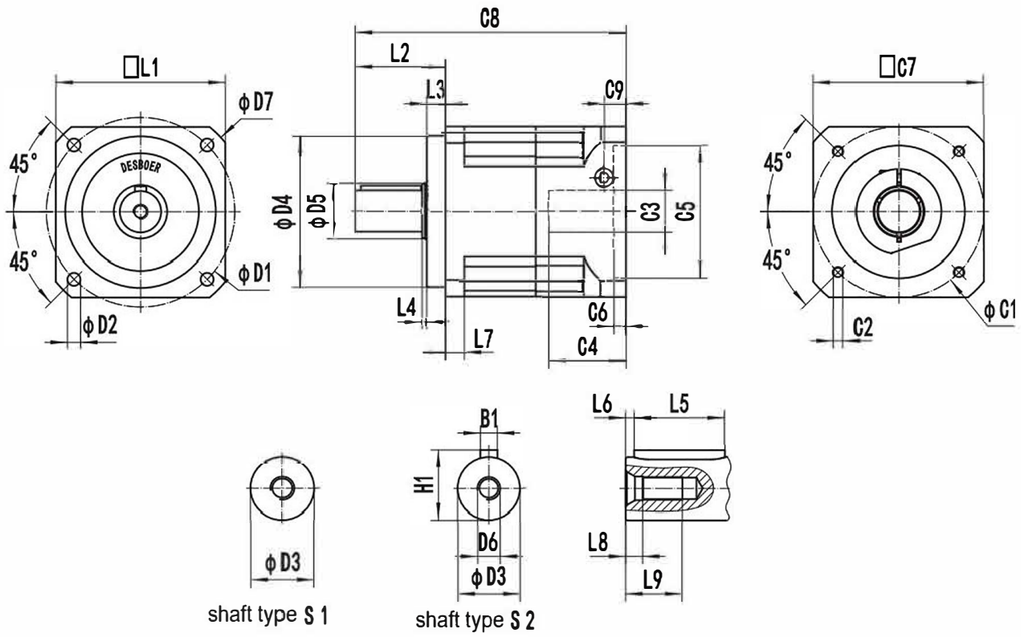

（Unit： mm）

NB220	D1	D2	D3	D4	D5	D6	D7	L1	L2	L3	L4	L5	L6
	250	17	75	180	94.5	M20×2.5P	292	220	138	30	3	90	7

NB220	L?	L?	L9	C1*	C2*	C3*	C4*	C5*	C5*	C5*	C5*	C9*	B1	H1
	25	15	42	235	M12×1.75P	≤55	118	200	10	220	367	44	20	79.5

*Dimensions based on servo-motor,please contact us for custom made order.

Parameter

MOTION.NL
Extreme and win

Gearbox performance data

Segment number		Single segment							
Ratio	i	3	4	5	6	7	8	9	10
Rated output torque	Nm	1080	1610	1900	1800	1710	1520	1420	1420
Emergency stop torque	Nm	Three times of Maximum Output Torque							
Rated input speed	rpm	2000							
Max input speed	rpm	4000							
Ultraprecise backlash	arcmin	≤1							
Precise backlash	arcmin	≤3							
Standard backlash	arcmin	≤5							
Torsional rigidity	Nm/arcmin	225							
Max. radial Force	N	50000							
Max. axial Force	N	25000							
Service Life	hr	20000 (10000 under continuous operation)							
Efficiency	%	≥97%							
Weight	kg	48							
Operating Temperature	℃	-10℃~+90℃							
Lubrication		Synthetic grease							
Protection Class		IP64							
Mounting Position		All directions							
Noise Level (N1=3000rpm,Non-Loaded)	dB（A）	≤70							
Rotary inertia	Kg・cm²	69.61	54.37	53.27	51.72	50.97	50.84	50.63	50.56

★ Maximum Output Torque $T_{2B}=60\% \times T_{2NOT}$

▲ Measured in the shaft center when the output speed is 100rpm

Dimensions（Double， Ratio i =15~100）

NB220 *Series*

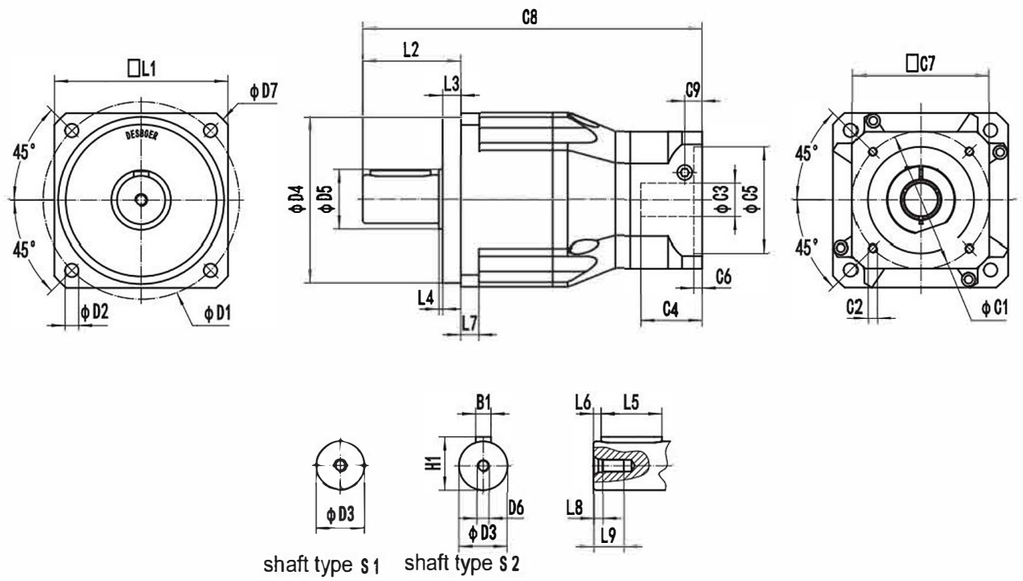

（Unit: mm）

NB220	D1	D2	D3	D4	D5	D6	D7	L1	L2	L3	L4	L5	L6
	250	17	75	180	94.5	M20×2.5P	292	220	138	30	3	90	7

NB220	L?	L?	L9	C1*	C2*	C3*	C4*	C5*	C5*	C5*	C5*	C9*	B1	H1
	25	15	42	200	M12×1.75P	≤48	116	114.3	10	180	455	52	20	79.5

*Dimensions based on servo-motor,please contact us for custom made order.

Parameter

MOTION.NL
Extreme and win

Gearbox performance data

Segment number		Double segment												
Ratio	i	15	20	25	30	35	40	45	50	60	70	80	90	100
Rated output torque	Nm	1080	1610	1900	1800	1710	1520	1420	1900	1800	1710	1520	1420	1420
Emergency stop torque	Nm	Three times of Maximum Output Torque												
Rated input speed	rpm	2000												
Max input speed	rpm	4000												
Ultraprecise backlash	arcmin	≤3												
Precise backlash	arcmin	≤5												
Standard backlash	arcmin	≤7												
Torsional rigidity	Nm/arcmin	225												
Max. radial Force	N	50000												
Max. axial Force	N	25000												
Service Life	hr	20000(10000 under continuous operation)												
Efficiency	%	≥94%												
Weight	kg	60												
Operating Temperature	℃	−10℃ ~ +90℃												
Lubrication		Synthetic grease												
Protection Class		IP64												
Mounting Position		All directions												
Noise Level (N1=3000rpm,Non-Loaded)	dB（A）	≤70												
Rotary inertia	Kg · cm²	23.29								22.51				

★ Maximum Output Torque $T_{2B}=60\% \times T_{2NOT}$

▲ Measured in the shaft center when the output speed is 100rpm